BACK WARNING SYSTEM

SPECIFICATION EB12B950

Item		Specification
Back warning control unit	Voltage rating	DC 12V
	Operation voltage	DC 9 ~ 16 V
	Operation temperature	-30°C ~ + 80°C
	Operation current	MAX 600 mA
	Operation frequency	40 ± 5 KHz
	Detective method	Direct and indirect detection
Ultrasonic sensor	Voltage rating	DC 8 V
	Detecting range	40 cm ~ 120 cm
	Operation voltage	DC 7.5~8.5 V
	Operation current	MAX 20 mA
	Operation temperature	-30°C ~ + 80°C
	Conservation temperature	-40°C ~ + 85°C
	Operation frequency	40 ± 5 KHz
	Number of sensors	4 (Rear Left, Right, Side Left, Right)
Piezo buzzer	Voltage rating	DC 12 V
	Operation voltage	DC 9 ~ 16 V
	Operation temperature	-30°C ~ + 80°C
	Operation current	MAX 60 mA
	Sound, tone	Oscillation frequency : 2.2±0.5 KHz
		Sound level : 70 dB (DC 13V, 1m)

BACK WARNING CONTROL MODULE

DIAGNOSIS E0F29F3F

1. DIAGNOSIS
   Turn the ignition switch ON, then shift the transaxle lever to 'R'. The Back Warning System is then checked.
   If no trouble, it generates buzzer alarm sound for 0.3 seconds after 0.5 seconds from power approval. In case of system failure, buzzer alarm is generated 3 times continuously with the interval of 0.3 seconds.

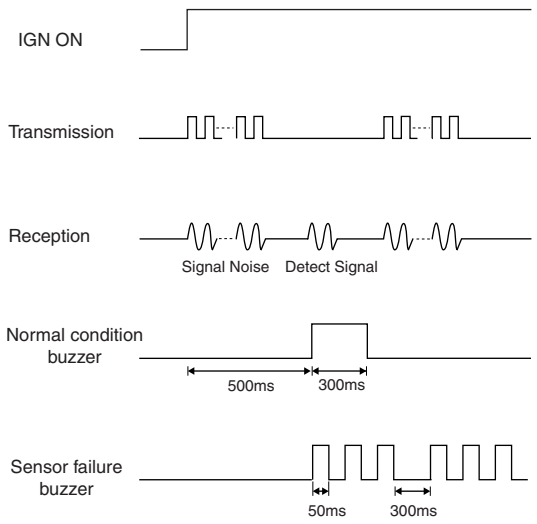

LTKG760B

2. DIAGNOSIS MODE
   Switch on diagnosis mode upon system failure.
   In case of system failure, then it indicates the failed point as follows.

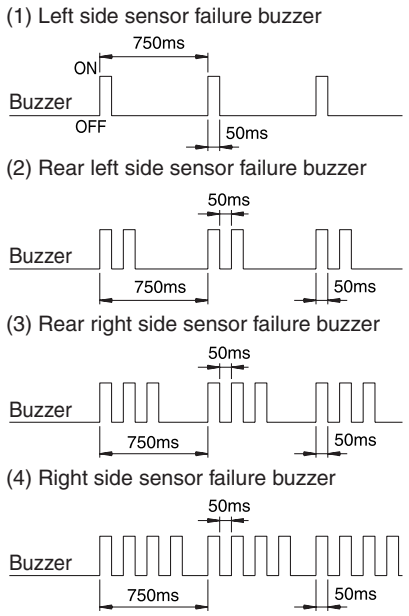

LTKG760C

SENSOR CONNECTION CHECKING

Transmit ultrasonic wave to the sensors, boost input signal, and detect wave.
Waveform will be found, oscillating for a certain period of time.

1. Waveform for a normal sensor connection

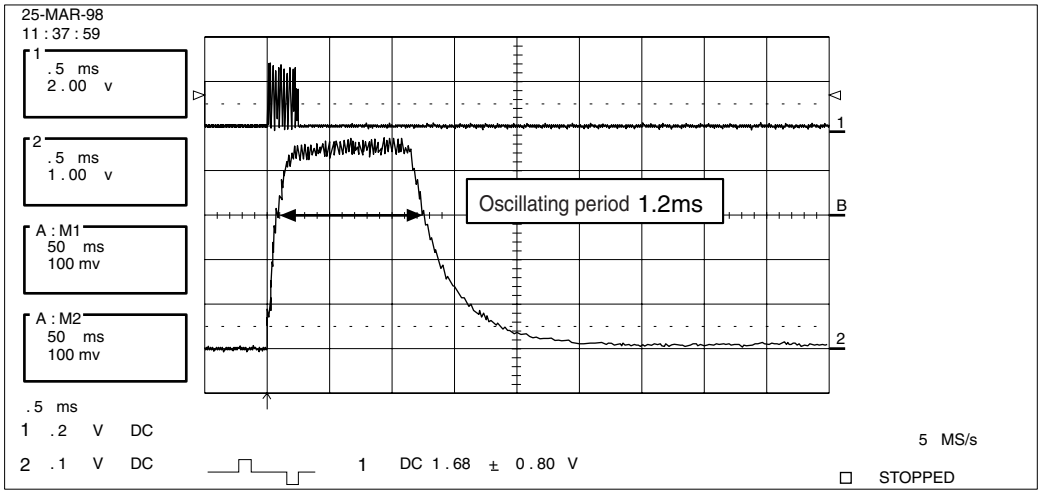

BTKG230F

2. Waveform for a failed sensor connection

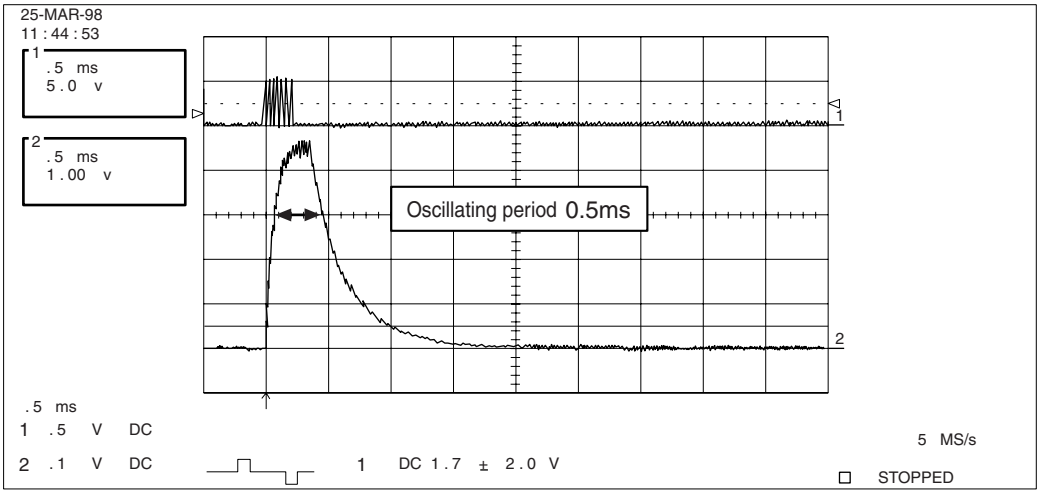

BTKG230G

NOTE

Sensor connection will be checked for oscillating period of input signal 3V. If oscillating period is more than 0.8ms, it is normal.

a. Left sensor failure : beep-beep-beep
b. Right sensor failure : beep beep-beep beep-beep beep
c. Rear-right sensor failure : beep beep beep-beep beep beep-beep beep beep
d. Right side sensor failure : beep beep beep beep-beep beep beep beep-beep beep beep beep

WARNING

1. Range detected by back sensors is limited.
   Watch back before reversing

2. There is a blind spot below the bumper. Low objects (for example boundary barrier) may be detected from minimum 1.5m away unable to detect at nearer.

3. Besides there are some materials unable to be detected even in detection range as follows.

   1) Needles, ropes, rods, or other thin objects.

   2) Cotton, snow and other material absorbing ultra-sonic wave
      (for example, fire extinguisher device covered with snow)

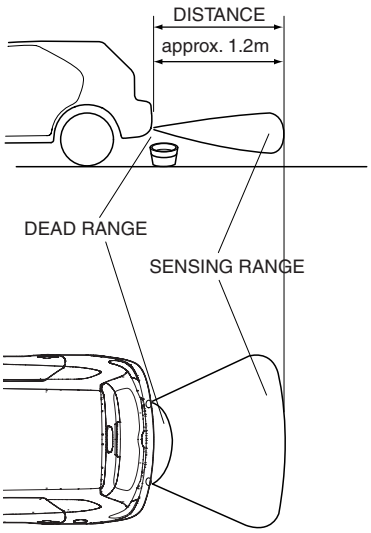

SBLBE6524L

   3) Reversing toward the sloped walls.

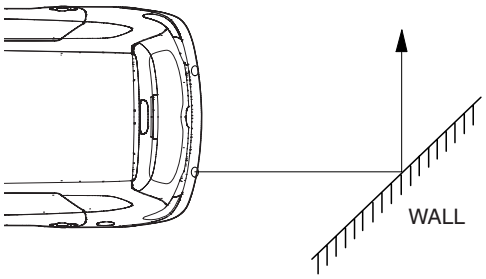

SBLBE6525L

   4) Reversing toward the sloped terrain.

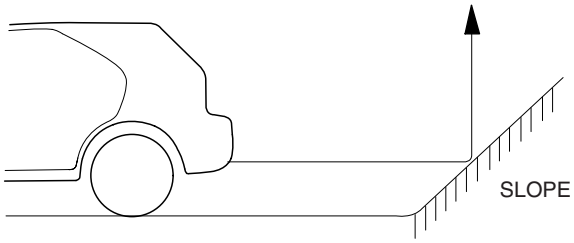

SBLBE6526L

4. False alarm may operate in the following condition: irregular road surface, gravel road, sloped road and grass. Upon alarm generation by grass the alarm may be generated by rock behind grass. Always visually check the area behind the vehicle before backing up. The sensors cannot discriminate between materials.

5. Sensors may not operate correctly in the below conditions.
   Ensure sensors are clean from mud or dirt

   1) When spraying the bumper, the sensor opening is covered with something in order not to be contaminated. If sensor opening is contaminated with mud, snow, or dirt, detection range will be reduced and alarm may not be generated under the crash condition. Dirt accumulated on the sensor opening shall be removed with water.
      Do not wipe or scrape sensor with a rod or a hard object.

   2) If the sensor is frozen, alarm may not operate until sensor thaws.

   3) If a vehicle stays under extremely hot or cold environment, the detection range may be reduced. It will be restored at the normal temperature.

   4) When heavy cargo is loaded in rear cargo area, it changes the vehicle balance, which reduces the detection range.

   5) When other vehicle's horn, motor cycle engine noise, or other ultra-sonic wave sources are near.

   6) Under heavy rain.

7) When reversing towards a vertical wall and the gap between the vehicle and the wall is 15cm. (Alarm may sound despite the absence of a barrier)

8) If radio antenna is installed at the rear.

9) If the vehicle rear wiring is re-routed or electrical component is added at the rear part.

10) Vehicle balance is changed due to the replacement of the rear spring.

11) The unit will operate normally when the vehicle speed is 5km/h or less.
Above this speed, the unit may not operate normally

6. Check the rear bumper for installation condition and deformation. If installed improperly or the sensor orientation is deviated, it may cause malfunction.

7. Be careful not to apply shock during sensor installation on the transmission or reception unit.

8. When adding electrical devices or modifying harness at the rear body of the vehicle, ensure not to change the transmission and reception unit wiring.
Tagging the transmission side and reception side, it may cause malfunction.

9. High power radio transmitter (above 10W) may cause malfunction. Do not install it on the vehicle.

10. Be careful that excessive heat or sharp objects shall not touch ultrasonic sensor surface.
Do not cover the sensor opening or press the sensor.

DESCRIPTION EEFEDDE5

When reversing, the driver is not easy to find objects in the blind spots and to determine the distance from the object. In order to provide the driver safety and convenience, back warning system will operate upon shifting to "R" Ultrasonic sensor will emit ultrasonic wave rearward and detect the reflected wave. Control unit will calculate distance to the object using the sensor signal input and output buzzer alarm in three steps (first, second and third alarm).

ALARM RANGE E376A6F5

Upon detecting an object at each range out of 3 ranges as stated below within the operation range, it will generate alarm.
First alarm : Object comes near to the sensor located at the rear of vehicle, within 81-120cm ± 15cm
Second alarm : Object comes near to the sensor located at the rear of vehicle, within 41-80cm ± 10cm
Third alarm : Object comes near to the sensor located at the rear of vehicle, within 40cm ± 10cm

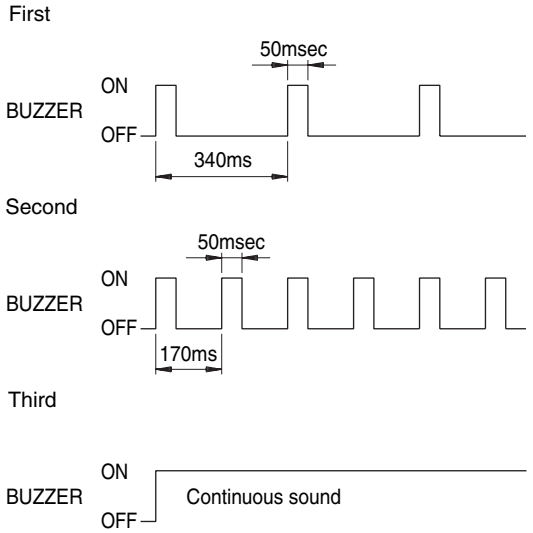

LTKG976C

NOTE

1. *Time tolerance of the above waveform : Time ± 10%*
2. *At nearer distance than 40cm, detection may not occur.*
3. *Alarm will be generated with vehicle reversing speed 10km/h or less.*
For moving target, maximum operation speed shall be target approach speed of 10km/h.
4. *When the vehicle or the target is moving, sequential alarm generation or effective alarm may be failed.*
5. *False alarm, or failure of the alarm to trigger may occur in the following conditions.*
   - *Irregular road surface, gravel road, reversing toward grass.*
   - *Horn, motor cycle engine noise, large vehicle air brake, or other object generating ultrasonic wave is near.*
   - *When a wireless transmitter is used near to the sensor.*
   - *Dirt on the sensor.*
   - *Sequential alarm may not occur due to the reversing speed or the target shape.*

COMPONENT LOCATION EEC96CB2

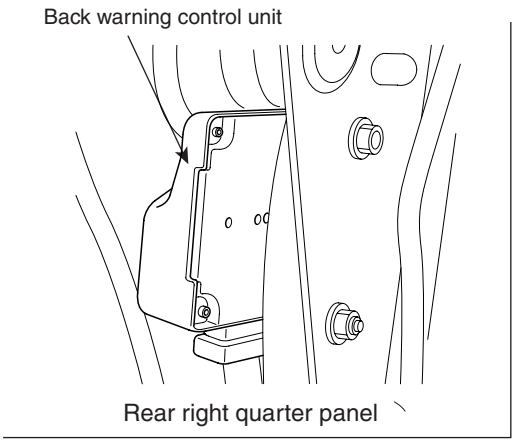

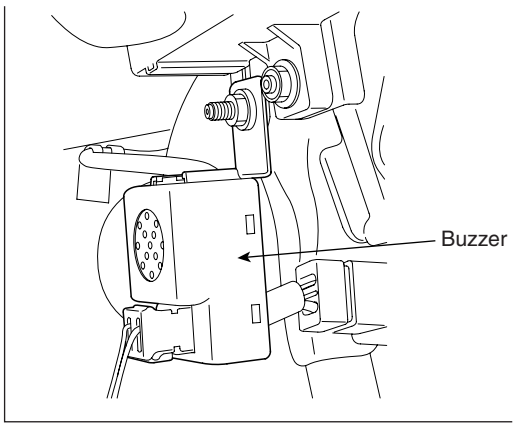

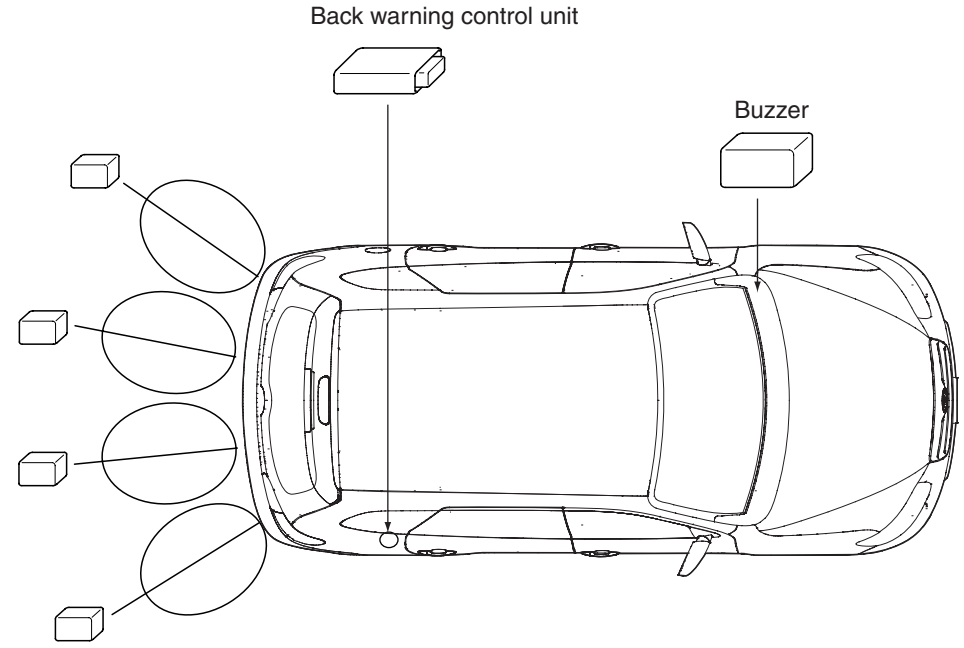

- First alarm : Object comes near to the sensor located at the rear of vehicle, within 81-120cm ± 15cm
- Second alarm : Object comes near to the sensor located at the rear of vehicle, within 41-80cm ± 10cm
- Third alarm : Object comes near to the sensor located at the rear of vehicle, within 40cm ± 10cm

SBLBE6520L

CIRCUIT DIAGRAM E72D773F

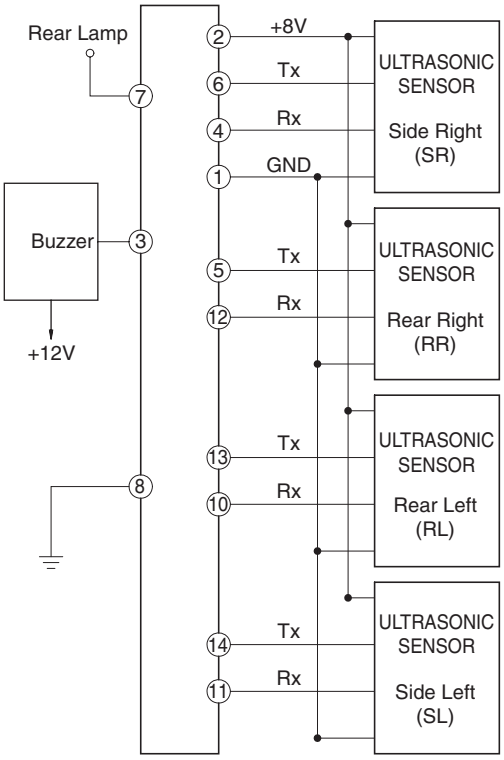

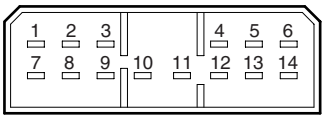

(Connector)

단자점검

Pin No.	Signal	Test : Desired result
1	GND SENSOR	0V
2	+8V SENSOR	8V (While operating)
3	PIEZO BUZZER	0V (While operating)
4	RX-SR SENSOR	0~1V Voltage change (Inspect waveform)
5	TX-RR SENSOR	0~3V Voltage change (Inspect waveform)
6	TX-SR SENSOR	0~3V Voltage change (Inspect waveform)
7	BACK UP LAMP POWER	12V (While shifting to "R")
8	GND	0V
10	N.C	0~1V Voltage change (Inspect waveform)
11	RX-RL SENSOR	0~1V Voltage change (Inspect waveform)
12	RX-SL SENSOR	0~1V Voltage change (Inspect waveform)
13	TX-RL SENSOR	0~3V Voltage change (Inspect waveform)
14	TX-SL SENSOR	0~3V Voltage change (Inspect waveform)

REPLACEMENT EED95FFE

1. Remove the right quarter trim of the trunk (Refer to the Interior trim in the BD group.)

2. Loosen the mounting nuts (2EA) and remove the back warning control unit (A) from the quarter panel.

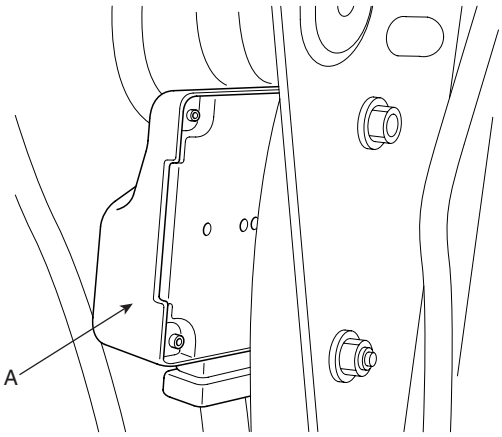

KTRE761A

ULTRASONIC SENSOR

OPERATION PRINCIPLE E8D3E46B

The sensor emits ultrasonic wave to the objects, and it measures the time until reflected wave returns, and calculates the distance to the object.

DISTANCE DETECTION TYPE

Direct detection type and indirect detection type are used together for improving effectiveness of the detection.

1. Direct detection type: One sensor transmits and receives signals to measure the distance.

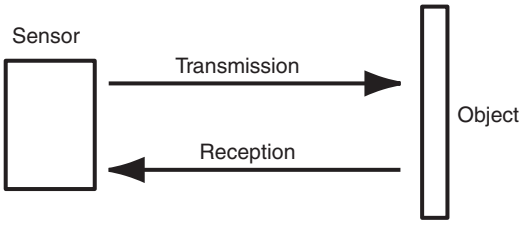

ETRF762A

2. Indirect detection type: One sensor transmits signals and the other sensor receives the signals to measure the distance.

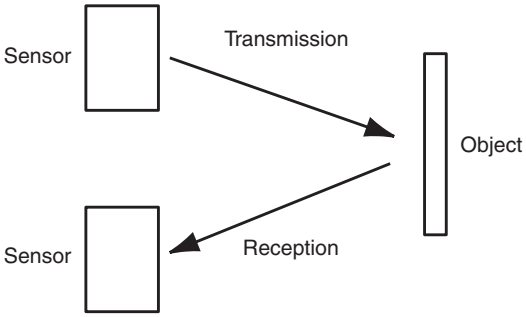

ETRF762B

MEASUREMENT PRINCIPLE

Back warning system (BWS) is a complementary device for reversing. BWS detects objects behind vehicle and provides the driver with buzzer alarm finding objects in a certain area, using ultrasonic wave propagation speed and time.
The propagation speed formula of ultrasonic wave in air is following :

v=331.5 + 0.6t (m/s)
v=ultrasonic wave propagation speed
t=ambient temperature

The basic principle of distance measurement using ultrasonic wave is :

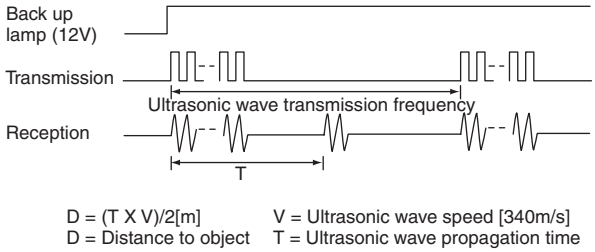

ETRF762C

SENSOR DETECTION RANGE

[Vertical range]

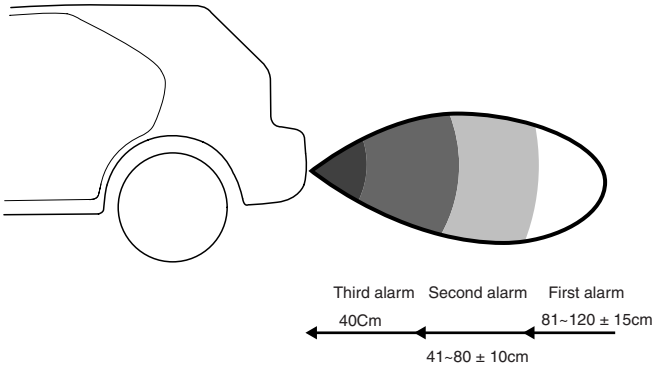

1. Distance tolerance(Messured at the front of sensor)
   - 81~120cm : ±15cm
   - 41~80cm : ±10cm
   - 40cm : ±10Cm
2. Detection tolerance
   - At 40cm :45˚ ± 15˚
   - At 80cm : 30˚ ± 15˚
   - At 120cm : 20˚ ± 15˚
3. At nearer distance than 40cm detection may occur.
4. Measurement condition : Room temperature (20℃), 90mm diameter, 3m length rod.

[Horizontal range]

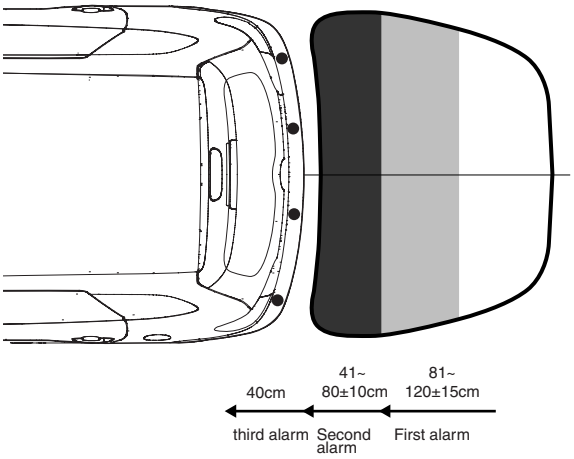

1. Distance tolerance(Messured at the front of sensor)
   - 81~120cm : ±15cm
   - 41~80cm : ±10cm
   - 40cm : ±10cm
2. Detection tolerance
   - At 80cm : 90˚ ± 20˚
   - At 120cm : 10˚ ± 20˚
3. At nearer distance than 40Cm detection may occur.
4. Measurement condition : Room temperature (20℃), 90mm diameter, 3m length rod.

NOTE

1. *14cm (Diameter) plastic rod is used for the test target.*
2. *The test result may differ by a different target object.*
3. *Detection range may be reduced by dirt accumulated on sensor, and extremely hot or cold weather.*
4. *The following object may not be detected.*
   - *Sharp object or thin object like rope.*
   - *Cotton, sponge, snow or other materials absorbing sonic wave.*
   - *Smaller objects than 14cm (Diameter), 1m length.*

REMOVAL EF1C9417

1. Remove the rear bumper (Refer to the Rear bumper in the BD group)

2. Disconnect the sensor connector at the inside of the rear bumper (C), and then remove the sensor (B) from the housing (A).

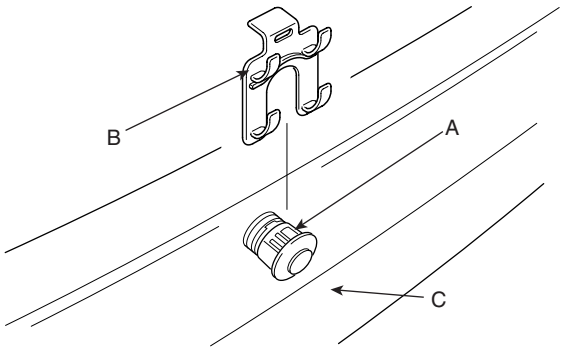

LTJF762E

INSTALLATION ED023E95

1. Reassemble the sensor to the rear bumper, and then connect the connector.

2. Reassemble the rear bumper.

BUZZER

INSPECTION ED8E0FBF

Test the buzzer by connecting battery voltage to terminal 1, and ground terminal 2.
The buzzer should make a sound. If the buzzer fails to make a sound, replace it.

REMOVAL E8162830

1. Disconnect the negative (-) battery terminal.
2. Remove the audio unit. (Refer to the audio in this group).
3. Remove the buzzer (A) after loosening the bolt and disconnecting the connector.

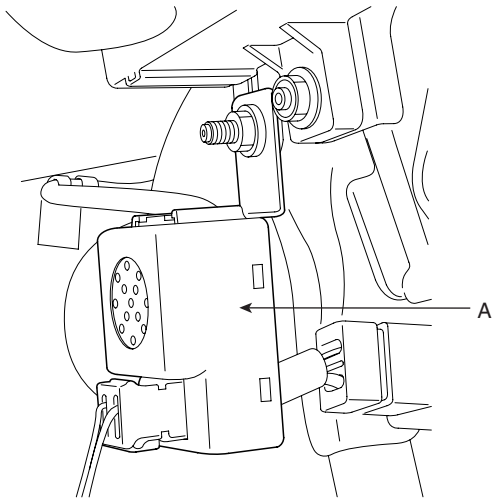

KTRE763A

INSTALLATION E20ECC6B

1. Reassemble the buzzer after connecting the connector.
2. Reassembly the audio unit.
3. Connect the negative(-) battery terminal.